viadux
WATER NETWORK SOLUTIONS

XDV-UDH
UNI-DIRECTIONAL KNIFE GATE VALVES

XDV-UDH WITH HANDWHEEL

XDV-UDH WITH PNEUMATIC ACTUATOR

FEATURES

Special L shaped replaceable seat.

Roller bearings in SS housing on all all sizes.

Fully lugged to suit AS4087 CL16.

Stainless steel stem protection tube included.

Gearbox included on DN450 and above.

Stainless steel afety guards included on all sizes

Special adjustable gate guide ensures no leakage.

Viton seat as standard.

Temperature range up to 200°C (depending on seat).

OPTIONS

ISO mount type.

WCB or Duplex body.

Wafer type body.

EPDM, NBR, PTFE or metal seat.

Electric or pneumatic actuator.

Non-rising stem.

Limit switches.

Chain wheel.

Anti-clockwise close.

Extensions.

TECHNICAL DATA

Size Range
DN50-DN1200

Pressure Class
Max PN10 dependant on valve size

Face to Face
MSS SP-81

Maximum Temperature Rating: (at nil pressure)
200°C Viton (standard)
120°C EPDM (optional)
90°C NBR (optional)
200°C PTFE (optional)
200°C Metal (optional)

Lugged to suit
AS4087, Class 16. (others on request)

XDV-UDH
UNI-DIRECTIONAL KNIFE GATE VALVES

DESCRIPTION

The AVFI XDV-UHD Series is a robust uni-directional stainless steel knife gate valve suitable for a wide range of industries including water and waste water, mining, pulp and paper, and aquaculture applications.

The unique design incorporates adjustable gate pressure block, perfect for low pressure applications. Double row thrust bearings for smooth operation, and a hardened chrome plated 316 stainless steel gate with viton seat provides the AVFI XDV-UHD Series the strength and diversity to handle a multitude of applications.

Standard on all the AVFI XDV-UHD Series knife gate valves are the stainless steel safety guards providing a physical barrier between the moving parts of the valves and the operator, and standard is the stainless steel stem cover.

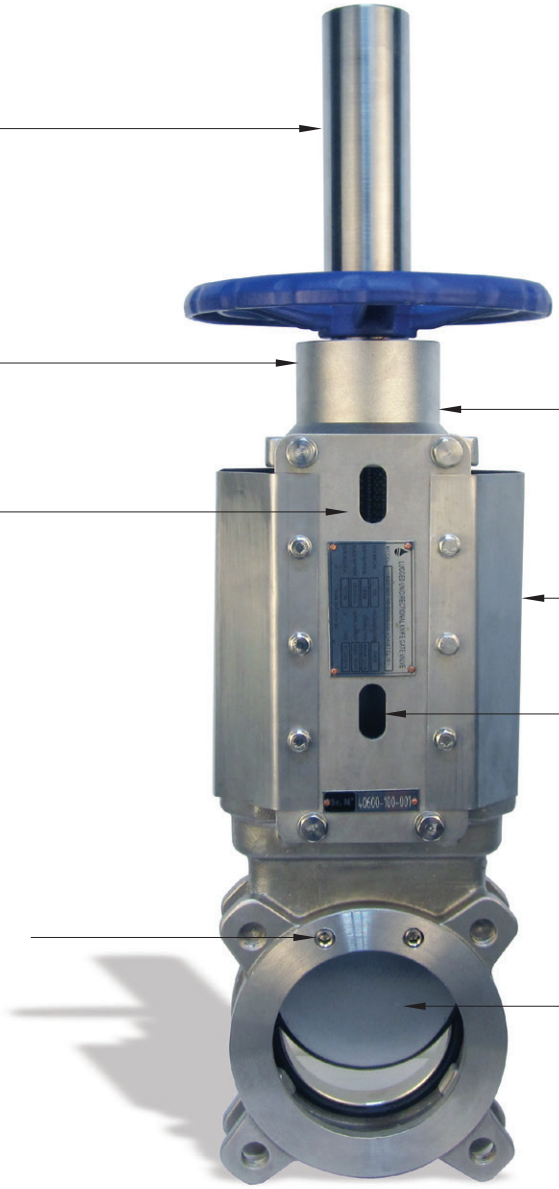

VIADUX PTY LTD PO BOX 141 FAIRFIELD, NEW SOUTH WALES 1860 AUSTRALIA / VIADUX.COM.AU / PHONE 1300VIADUX

All Viadux trademarks and logos are owned by Viadux Pty Ltd. All other brand or product names are trademarks or registered marks of their respective owners. Because we are continuously improving our products and services, Viadux reserves the right to change specifications without prior notice.

XDV-UDH
UNI-DIRECTIONAL KNIFE GATE VALVES

MATERIAL SPECIFICATIONS & PARTS LIST

XDV-UDH WITH HANDWHEEL
DN50-DN400

SECTION A - A

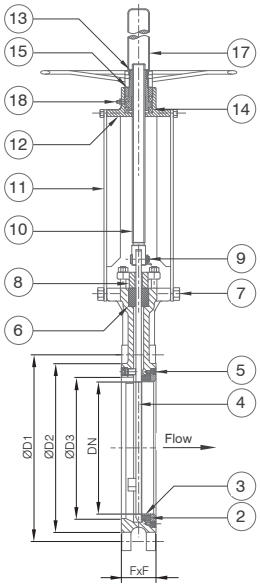

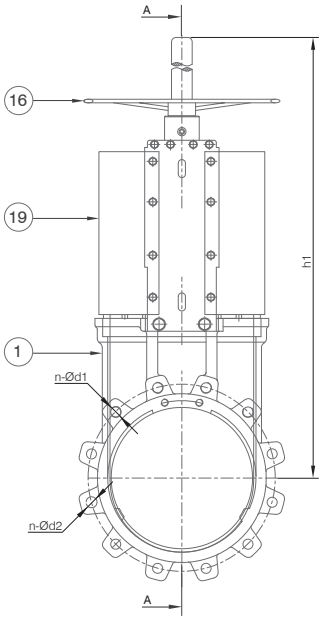

XDV-UDH WITH GEARBOX
DN450-DN1200

SECTION A - A

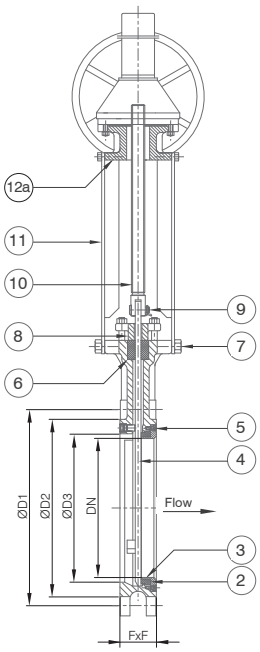

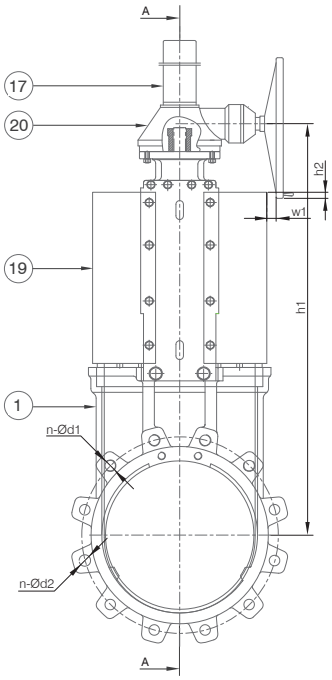

No	Description Material / Standard
1	Body CF8M
2	Seat Viton
3	Seat Retainer SS316
4	Gate SS316 +Cr
5	Bolt A4-70
6	Packing PTFE +SI
7	Bolt A4-70
8	Gland Follower CF8M
9	Pin SS304
10	Stem SS304
11	Support Plates SS304
12	Bearing Housing SS304
12a	Bearing Housing Epoxy Coated WCB
13	Stem Nut SS304
14	Bearing SS440
15	Bearing Cover SS304
16	Handwheel Epoxy Coated Iron
17	Stem Cover SS304
18	Grease Fitting C95200
19	Safety Guards SS304
20	Bevel Gear

VIADUX PTY LTD PO BOX 141 FAIRFIELD, NEW SOUTH WALES 1860 AUSTRALIA / VIADUX.COM.AU / PHONE 1300VIADUX

All Viadux trademarks and logos are owned by Viadux Pty Ltd. All other brand or product names are trademarks or registered marks of their respective owners. Because we are continuously improving our products and services, Viadux reserves the right to change specifications without prior notice.

XDV-UDH
UNI-DIRECTIONAL KNIFE GATE VALVES

MATERIAL SPECIFICATIONS & PARTS LIST

XDV-UDH WITH PNEUMATIC ACTUATOR
DN50-DN1200

SECTION A - A

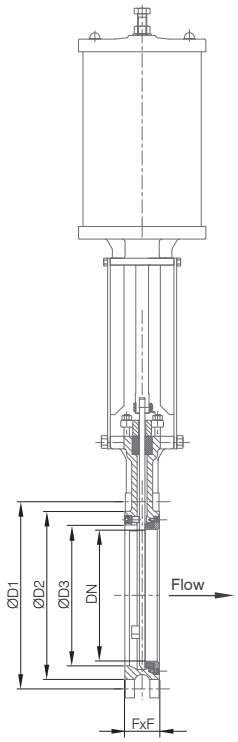

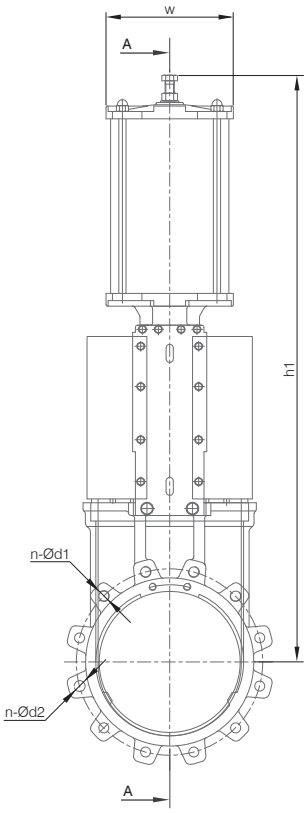

PNEUMATIC ACTUATOR
SECTION A - A

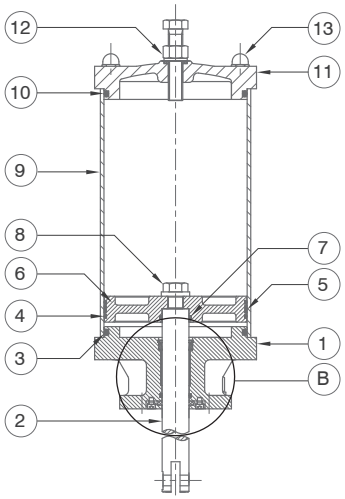

DETAILED VIEW B

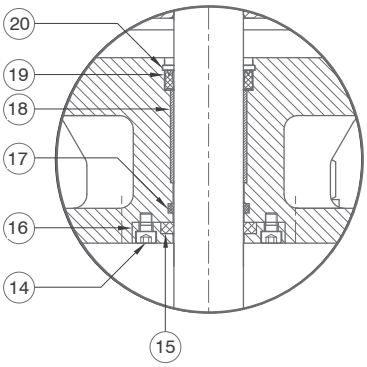

No	Description Material / Standard
1	Bottom Cover Epoxy Coated Steel
2	Piston Rod Cr Plated Steel
3	O-Ring NBR
4	O-Ring NBR
5	Wear Ring PTFE +Cu
6	Piston Aluminium Alloy
7	O-Ring NBR
8	Bolt A2-70
9	Cylinder Tube Aluminium Alloy Cr Plated WCB (300MM & Above)
10	O-Ring NBR
11	Top Cover Epoxy Coated Sheet
12	Stroke Adjuster A2-70
13	Tie Rod A2-70
14	Bolt A2-70
15	Scraper Seal PTFE
16	Seal Retainer SS304
17	O-Ring NBR
18	Shaft Bearing Brass
19	Shaft Seal Polyurethane
20	O-Ring NBR

VIADUX PTY LTD PO BOX 141 FAIRFIELD, NEW SOUTH WALES 1860 AUSTRALIA / VIADUX.COM.AU / PHONE 1300VIADUX

All Viadux trademarks and logos are owned by Viadux Pty Ltd. All other brand or product names are trademarks or registered marks of their respective owners. Because we are continuously improving our products and services, Viadux reserves the right to change specifications without prior notice.

XDV-UDH
UNI-DIRECTIONAL KNIFE GATE VALVES

DIMENSIONS (MM)

XDV-UDH DN50-DN1200										
DN	FxF	h1	ØD1	ØD2	ØD3	n-Ød1	n-Ød2	h2	w1	Weight (kg)
50	48	302	114	90	60	2-M16	2-M16	-	-	9
65	48	345	127	103	75	2-M16	2-M16	-	-	11
80	51	365	146	122	90	2-M16	2-M16	-	-	12
100	51	410	178	154	105	2-M16	2-M16	-	-	16
125	57	460	210	186	130	2-M16	6-M16	-	-	20
150	57	505	235	211	158	2-M16	6-M16	-	-	25
200	70	615	292	266	210	2-M16	6-M16	-	-	43
250	70	740	356	324	260	2-M16	6-M20	-	-	62
300	76	840	406	378	310	4-M20	8-M20	-	-	78
350	76	970	470	429	360	4-M24	8-M24	-	-	112
375	76	1020	495	463	385	4-M24	8-M24	-	-	145
400	89	1060	521	489	415	4-M24	8-M24	-	-	154
450	89	1265	584	532	465	4-M24	8-M24	30	35	238
500	114	1375	641	609	515	6-M24	10-M24	15	85	265
600	114	1570	756	720	615	6-M27	10-M27	15	50	300
700	114	1710	845	809	710	8-M27	12-M27	15	50	510
750	114	1820	927	888	725	8-M30	12-M30	15	50	580
800	114	1950	984	942	790	8-M33	12-M33	15	50	640
900	114	2100	1092	1050	860	10-M33	14-M33	15	50	850
1000	114	2300	1175	1133	980	10-M33	14-M33	15	50	1100
1200	114	2650	1410	1368	1180	14-M33	!8-M33	15	50	1680

XDV-UDH With Pneumatic Actuator					
DN	h1	w	Cylinder Bore (mm)	Stroke (mm)	Cylinder Weight (kg)
50	457	100	80	60	6.3
65	505	100	80	75	6.3
80	545	120	100	90	6.3
100	615	120	100	110	6.3
125	680	150	125	135	9.2
150	760	150	125	160	9.2
200	950	195	160	210	26
250	1135	240	200	260	39
300	1320	280	230	310	60
350	1510	280	250	360	98
375	1610	395	280	410	103
400	1650	395	280	410	103
450	1850	395	300	460	126
500	2010	423	320	510	136
600	2300	423	320	610	146

VIADUX PTY LTD PO BOX 141 FAIRFIELD, NEW SOUTH WALES 1860 AUSTRALIA / VIADUX.COM.AU / PHONE 1300VIADUX

All Viadux trademarks and logos are owned by Viadux Pty Ltd. All other brand or product names are trademarks or registered marks of their respective owners. Because we are continuously improving our products and services, Viadux reserves the right to change specifications without prior notice.